Power Amplifier “UM-U-2017” 30-40 Watts

This broadband power amplifier allows to obtain the peak power approximately 30-40 watts into 50 Ohm of load when the input voltage is about 100 mV. The irregularity of amplitude - frequency characteristics of Power amplifier - not more than 0,5 dB in the frequency band 1-30 MHz.

The RF signal from the input of the amplifier goes to the base of transistor VT1 (КТ646), which is the first stage of the PA. In the circuit of the transistor included the broadband transformer TR1. It is assembled on a ferrite coil 10x6x5. Two twisted wires 0.28mm (10mm step of twist). 7 turns (see illustration bwlow). The power supply of cascade is +12V coming from the TX control unit RX/TX transceiver. The quiescent current of the cascade is 20-30 mA.

The penultimate stage of the amplifier working in a mode of class AB assembled on transistor КТ920А (VT2). The bias voltage is set by the diode VD1 (КД208). The quiescent current of 40-50 mA set by selection of resistor R7. Resistors R9 and R10 form a chain of negative reverse line improves the linearity and stability of operation of the cascade. If necessary, the frequency response can be adjusted by the selection of elements C10,R8. Power of cascade is +12V.

Load of cascade is TP2 broadband transformer assembled on ferrite coils 10x6x5. (see pictures and assembly instruction below).

Terminal of the amplifier assembled on the push-pull circuit with transistors VT3, VT4 (КТ922Б or 2Т922Б). Voltage bias is regulates by transistor КТ815 (КТ817) and diodes VD2 and VD3 КД510 (1N4148, КД522). The quiescent current of the output transistors is set by resistor R17. For thermal stabilization of the operation of the cascade the diodes VD2 and VD3 have thermal contact with the housings of transistors VT3, VT4 and VT5 transistor with heatsink (cooler). Correction circuit C15, and C17 R12, R14 reduce the gain in the low frequencies, and C24, in conjunction with the primary winding TP3 raise the frequency response near the upper boundary of the operating range. Load of cascade is the broadband transformer TP3 assembled similarly to TP2, only in the shoulder on each tube (length 23 mm) placed at four ferrite coils 10x6x5. Power amplifier +20-24V. The maximum current of the output stage is 1.8 – to 2.4 A.

Structurally the amplifier is made on a double sided PCB with dimensions 124x60 mm. Transistors VT2, VT3, VT4 mounted on a common radiator – duralumin plate thickness of 3-5 mm. the Size and location of holes for the assembly of the radiator (cooler) are shown on diagram below.

Broadband transformers TP2 and TP3 are soldered directly to the printed conductors of the Board. For assembly of the inductor Dr3 use a ferrite coil 10x6x3. Wire MGTF (pink) 0.35mm. 18-20 turns. Transistor VT5 is attached to the radiator (cooler) through the insulating gasket.

Transformer Tp2:

Elements: Ferrite coils 10x6x5, quantity – 4 pcs, foil, PCB for assembly the transformer – 2pcs, wire MGTF (pink) 0.35mm. Length - 150mm

Assembly process:

- cut foil two rectangles of size 18x18 mm;
- using any rod with a diameter of 5.5-6 mm (drill bit 5.5-6 mm) bend the foil into a cylinder (2 pcs.);
- on the each resulting tube put three ferrite rings;
- connect the structure of circuit boards and coils according to the sample in the photo. ALIGN it and solder the ends of the foil with the boards;
- perform secondary winding – 2 turns of wire MGTF 0.35 mm;
- place the resulting Tp2 to the amplifier Board according to the wiring diagram and solder in the tinned areas;
- the ends of the secondary winding - solder to the pads of the circuit Board according to the wiring diagram.

Transformer Tp3:

The Assembly of the transformer TP3 is similar to the transformer Tp2.

Elements: ferrite coils 10x6x5, quantity – 8 pieces, foil, PCB for assembly the transformer - 2 pieces, wire MGTF-0,5 length 150 mm.

Assembly process:

- cut foil two rectangles of size 23x18 mm;
- using any rod with a diameter of 5.2 mm to 5.5 mm (drill 5.5-6 mm) bend the foil into a cylinder (2 pcs.);
- on each tube put four ferrite coils;
- connect the structure of circuit boards and coils according to the sample in the photo. ALIGN it and solder the ends of the foil with the boards;
- perform secondary winding – 2 turns of wire MGTF 0.35 mm;
- place the resulting Tp2 to the amplifier Board according to the wiring diagram and solder in the tinned areas;
- the ends of the secondary winding - solder to the pads of the circuit Board according to the wiring diagram.

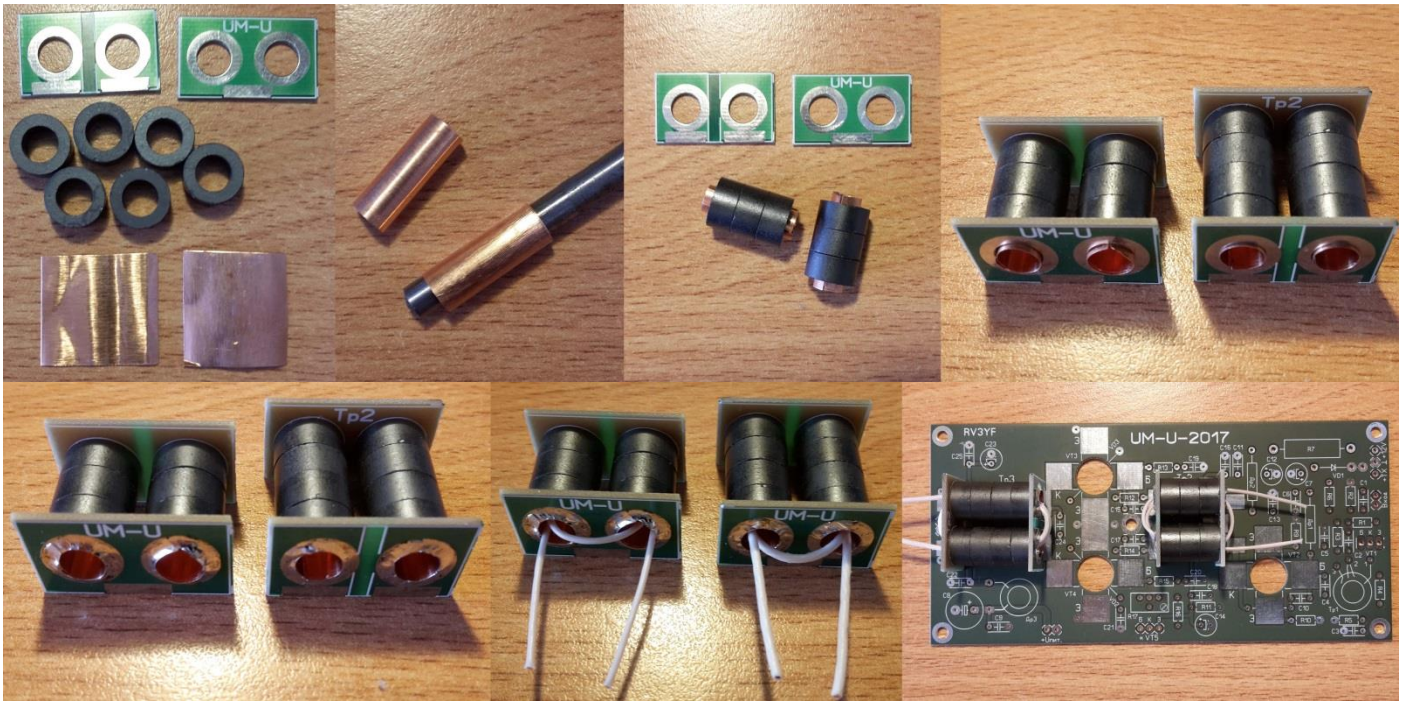

Diagram of radiator (cooler)

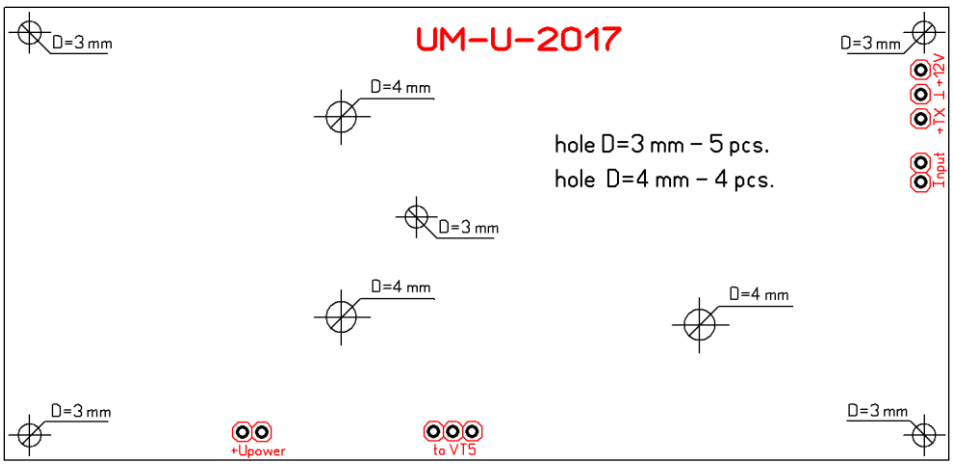

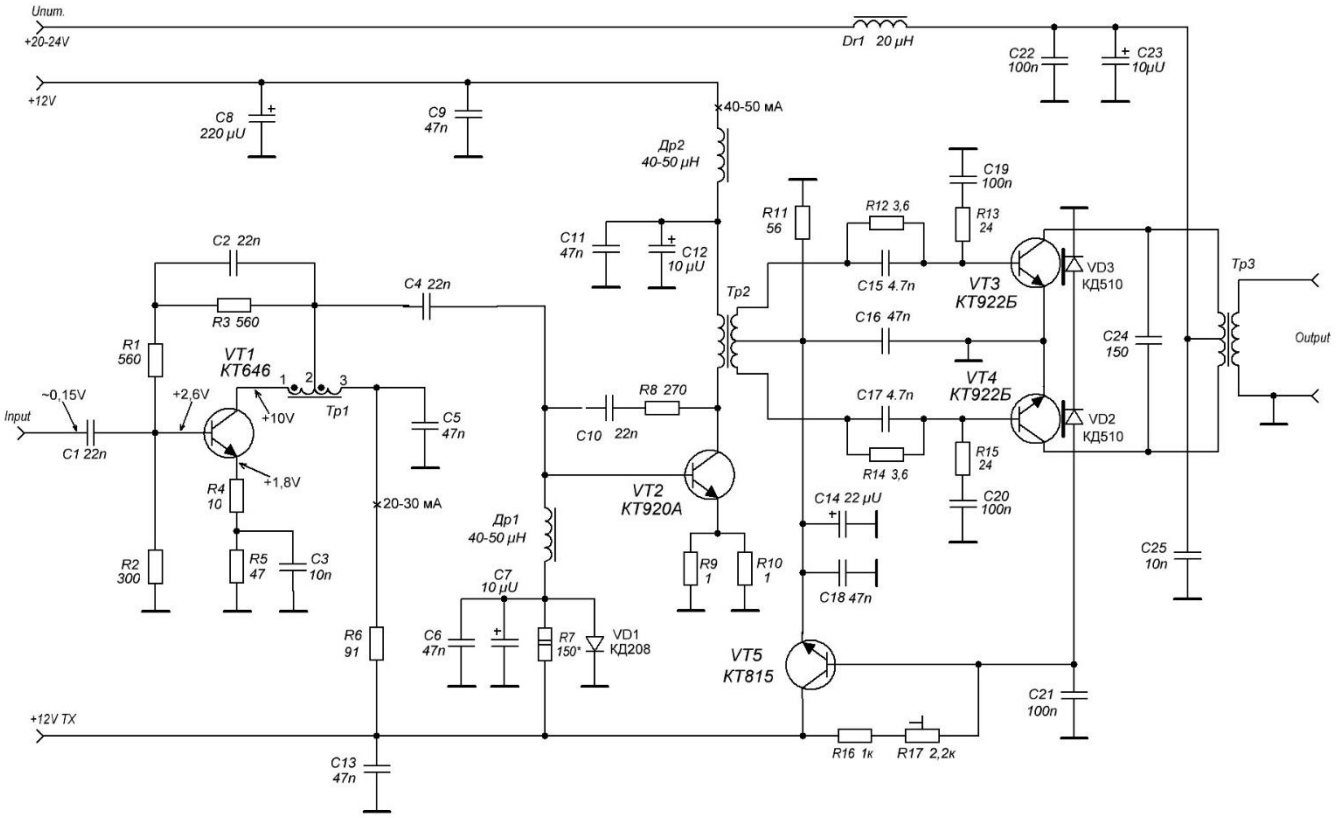
Uпит.
+20-24V
+12V
C8 220 μU
C9 47n
Dr1 20 μH
C22 100n
C23 10μU
40-50 мА
Др2 40-50 μH
C19 100n
R11 56
R12 3,6
R13 24
C11 47n
C12 10 μU
C2 22n
R3 560
C4 22n
Tp2
C15 4.7n
VT3 КТ922Б
VD3 КД510
Tp3
Output
C16 47n
C24 150
R1 560
VT1 КТ646
Tp1
C5 47n
R8 270
C17 4.7n
VT4 КТ922Б
VD2 КД510
~0,15V
Input
C1 22n
+2,6V
+10V
C10 22n
R14 3,6
R15 24
+1,8V
R4 10
20-30 мА
VT2 КТ920А
C14 22 μU
C20 100n
Др1 40-50 μH
R2 300
R5 47
C3 10n
R9 1
R10 1
C25 10n
C7 10 μU
C18 47n
R6 91
C6 47n
R7 150*
VD1 КД208
VT5 КТ815
C21 100n
+12V TX
R16 1к
R17 2,2к
C13 47n


КТ646
E C B


КТ815 (КТ817)
E C B

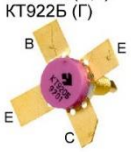
КТ920А (Б,Г)
КТ922Б (Г)
B E
E C


КД208

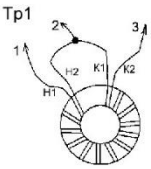
Tp1
1
2
3
H1
H2
K1
K2

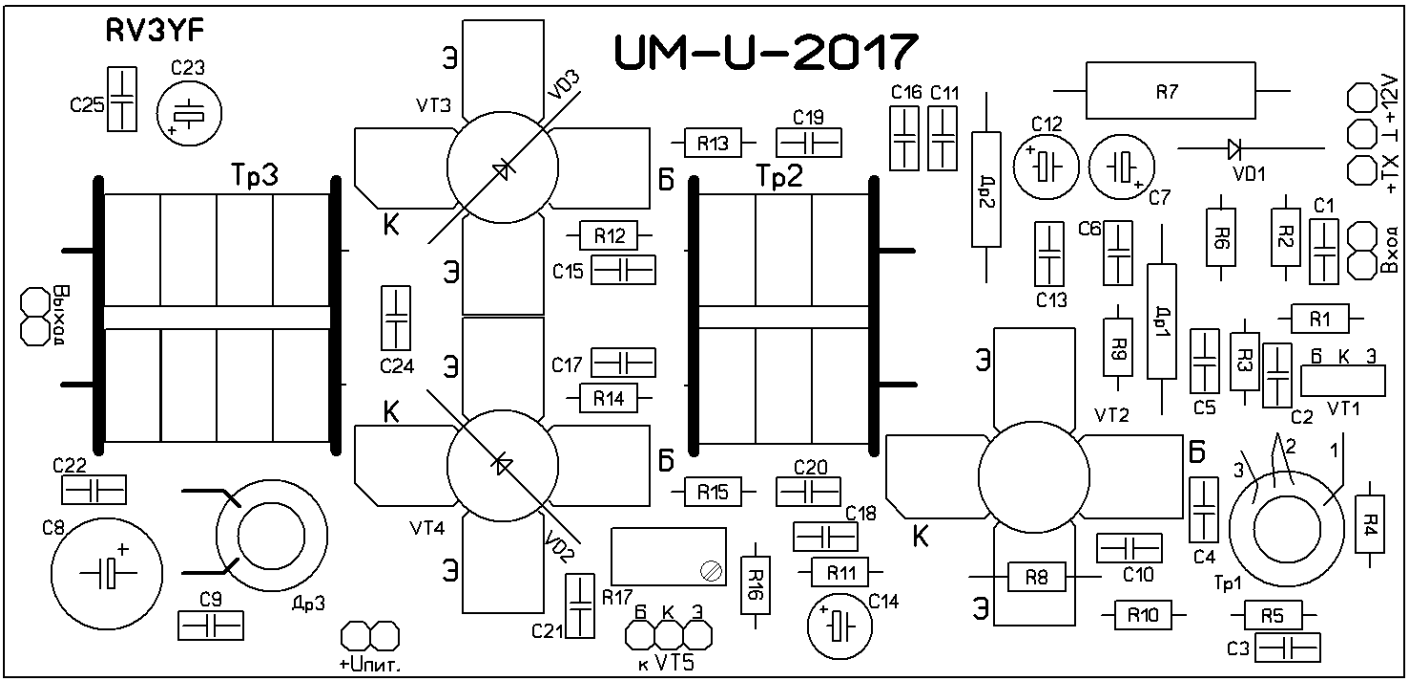
RV3YF
UM-U-2017
C25
C23
Tp3
VT3
VD3
Э
К
Б
R13
C19
C16 C11
R7
C12
C7
VD1
+TX
+12V
Tp2
Др2
R12
C15
C6
R6
R2
C1
Вход
Выход
C13
C24
C17
R14
R9
Др1
R1
C5
R3
C2
VT1
Б К Э
VT2
C22
C8
Др3
C9
VT4
VD2
R15
C20
C18
R11
C14
R16
R17
C21
к VT5
R8
C10
C4
Tp1
R4
R10
R5
C3
+Uпит.

EXAMPLE of ASSEMBLED Unit